ORGARAIL® Illuminated Handrail Inserts

ORGANIC LIGHTING®

Project

Date

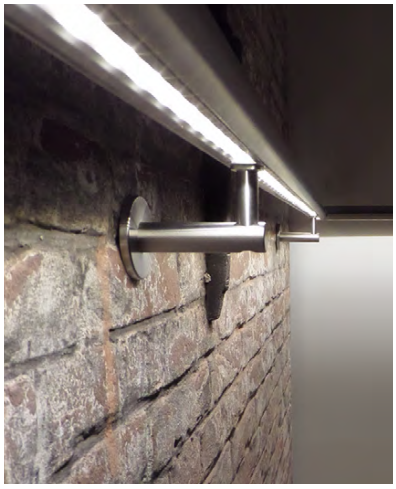

A contractor friendly linear lighting strip system for installing continuous flexible 24V LED strip into 1.5" - 4" round standard Cap Rails. Maintainable, replaceable OrgaLED® strip slides into rails from one end, speeding installation and avoiding mishandling of LED's and sensitive electronic components.

OrgaRail® inserts convert most standard Cap Rail into the most sophisticated installer friendly handrail lighting available, and can also be installed in standard or custom wood handrails.

Features

- For use with C.R. Laurence GRS round Cap Rails or similar high quality handrails.
- Handrail installer is responsible for field measurements.
- Organic Lighting supplies flexible OrgaLED strip lighting and Cap Rail mounting profiles.
- Handrail hardware supplied by other railing maufacturer. (eg: C.R. Laurence).
- East to assemble and install.
- 1.5" / 1.66" / 1.9" and multiple other handrail diameter options.
  OrgaRail Inserts come in 4' increments.
- OrgaLED strips are Symmetrical (Addition Asymmetrical cover lenses are available).
- MAX LED run length of 33' with remote power supply.
- Standard color temperatures in
- 2700K, 3000K, 3500K, 4000K, 5000K.
- Dimmable.
- 94 CRI+.
- 50,000 hour LED life.
- Low voltage 24VDC, Class 2.
- IP40; IP67 wet location
- Warranty: 5 years.

Slideable OrgaLED Strip

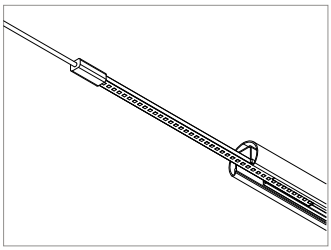

Profile Dimension

Dimensions for reference only

Section Profile

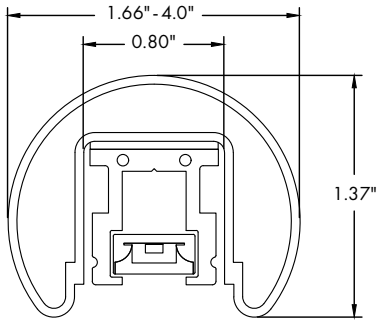

OrgaRail Insert Section Profile

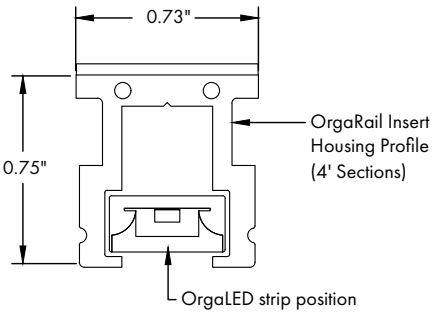

Components

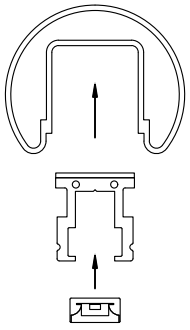

ORGARAIL® Illuminated Handrail Inserts

ORGANIC LIGHTING®

Project

Date

OrgaRail® Inserts enable long lengths of up to 33ft of flexible waterproof LED strips to be slid in from the power entry point and replaced just as easily. The insert profiles retain the strip securely without the need for additional lenses.

CONTINUOUS LONG RUNS:

OrgaRail® Post top or Wall mounts are designed to enable continuous feeds through the mounting support. When used with other manufacturers systems, such as CRL where the mounting components may block direct run through the insert profiles should be field cut to fit between posts with a one and a half inch gap each side of the posts, which enable the strip to transition from post to post section, by feeding it manually over the connection point.

SYMMETRIC

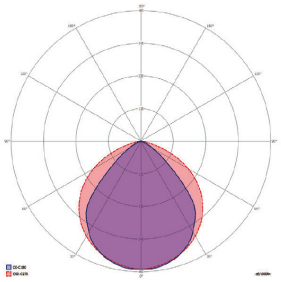

Deco
41.4-45 lm/ft

Power
138-150 lm/ft

High Power
234.6-255 lm/ft

FULL CUT-OFF

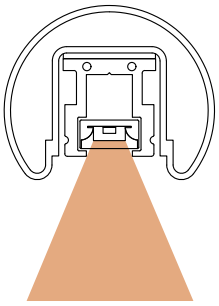

OrgaLED® Deco Top

Part #	Part#	Color	Current (A)	CRI	lm/ft	W/ft
037071		2700K	350mA	>94	41.4	0.3
037072		3000K	350mA	>94	42.6	0.3
037073		3500K	350mA	>94	42.6	0.3
037074		4000K	350mA	>94	45	0.3
037075		5000K	350mA	>94	45	0.3

OrgaLED® Power Top

Part #	Color	Current (A)	CRI	lm/ft	W/ft
037091	2700K	350mA	>94	138	1
037092	3000K	350mA	>94	142	1
037093	3500K	350mA	>94	142	1
037094	4000K	350mA	>94	150	1
037095	5000K	350mA	>94	150	1

OrgaLED® High Power Top

Part #	Color	Current (A)	CRI	lm/ft	W/ft
037111	2700K	350mA	>94	234.6	1.7
037112	3000K	350mA	>94	241.4	1.7
037113	3500K	350mA	>94	241.4	1.7
037114	4000K	350mA	>94	255	1.7
037115	5000K	350mA	>94	255	1.7

OrgaRail® Illuminated Handrail Insert

Part #	Description
012959	OrgaRail Illuminated Handrail Insert

ORGARAIL® Illuminated Handrail Inserts

ORGANIC LIGHTING®

Project

Date

REPLACING INDIVIDUAL LIGHTING FIXTURES: (other manufacturers rails)
Where an existing illuminated railing light with individual light fixtures between posts or wall mounts is being replaced, the insert profile and strips can be cut to length and connected to existing through wiring connections.

OrgaRail Insert profiles also contain a wire-thru cavity which enable secondary low voltage wire runs to be run.

Installation Guide

1

1. Field cut OrgaRail inserts to the match the full length of the handrail
2. Use dowel pins to perfectly butt them up.

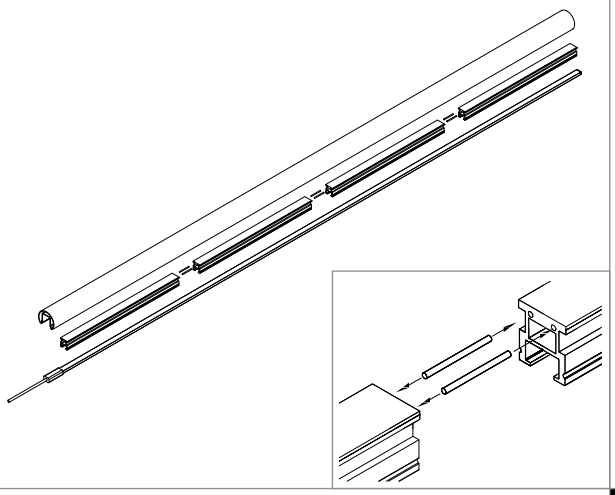

2

1. Take off 3M adhesive backing on all the OrgaRail inserts.

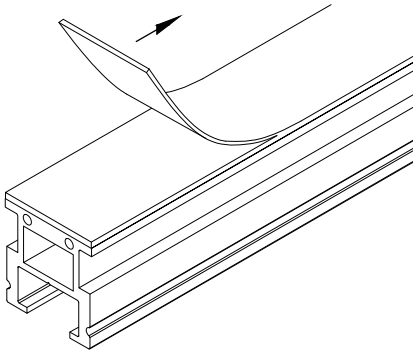

3

1. Leave 1.5" gap for all power feed connections.
2. Firmly place directly in the center of the handrail.

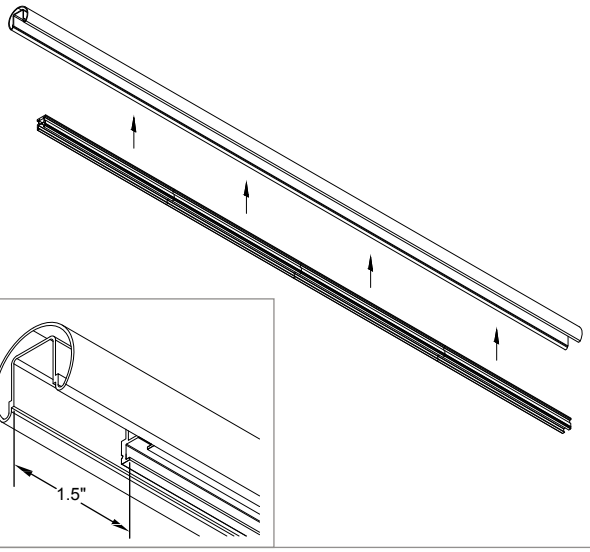

4
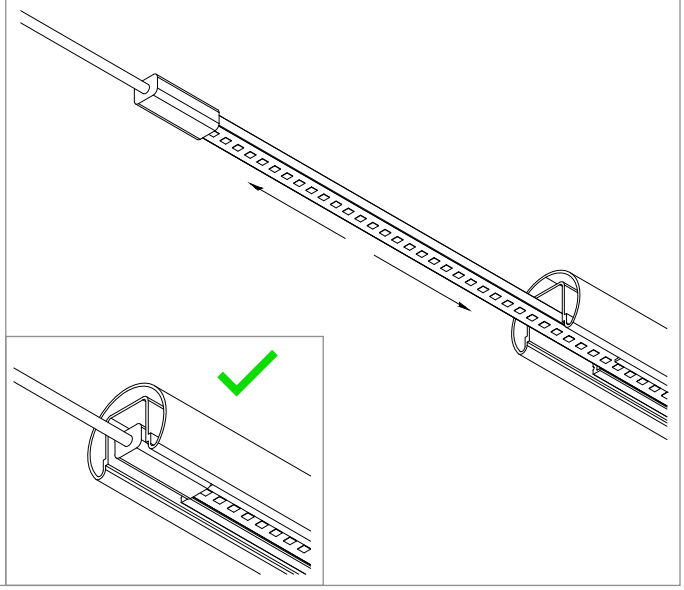
1. Slide OrgaLED strip into the OrgaRail Insert.